BELLA FIGURA

Gibbous Lamp

TL815

Collection Name
VEGA COLLECTION

There is no celestial body as prominent in the night sky than our humble Moon, its faithful presence is one we consider with wonderment and awe. The Gibbous table lamp is made in tribute to the mysterious spirit of our lunar companion; a generous hand-blown glass body in three shadowy tones paired with a textured and gilded neck which echoes the rocky surface of The Moon. Owed to its flattened form and slim oval lampshade, Gibbous is perfectly suited to console tables and narrower spaces.



TL815 in Midnight and Antique Silver Leaf with 16" Oval in 1806W-1012 Dust

Available Finishes

Murano Glass Finish


Cacao


Olive


Midnight

Neck and Bulb Holder


Antique Gold Leaf


Antique Silver Leaf

Recommended Shade(s) (OPTIONAL)

16" Oval

Silk Flex


Black


Cream

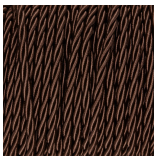
Brown


Silver

Available Sizes

Size One
TL815,
Height: 47.7 cm (18.78")
Width: 28 cm (11.02")
Depth: 14 cm (5.51")
Bulbs: 1 × 40W E26
Cable Exit: Top

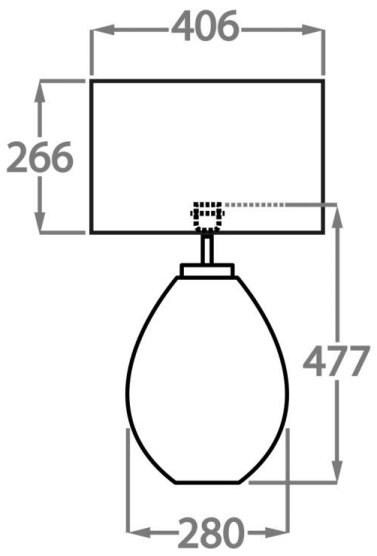

Dimensions are measured from the base of the lamp to the middle of the bulb holder and are excluding shade.
The overall height including the recommended 16" straight oval shade is 70.7cm - 27.8"