BELLA FIGURA

Diamond Teardrop Small Lamp

TL711-SM

Collection Name
BEVERLY HILLS COLLECTION

Introducing the new Diamond Teardrop range; unrivalled Italian glass work from our trusted makers in Murano; the design of these lamps carry the finesse, craftsmanship and weight you expect from our faceted Diamond range but with sweeping curves and softer facets. Available in our core standout colour ways from the Beverley Hills collection and various silhouettes and sizes to suit

Test Certification

IEC (International Electrotechnical Commission) test certificates available - will incur a surcharge
UL (Underwriters Laboratories) test certificates available for the USA - will incur a surcharge
Suitable for Yachts - Rod and bolting available for use on yachts

Compatible with

Express

Yacht Club



TL711-SM in Clear Murano Glass with a 8 Inch Tall Drum Shade Shade

Available Finishes

Metal Finish



Brushed Gold



Brushed Nickel



Polished Gold



Polished Nickel

Murano Glass Finish



Slate & Clear



Tobacco & Clear



Clear (Diamond)



Amethyst & Clear



Forest Green & Clear

Recommended Shade(s) (OPTIONAL)

8" Tall Drum

Silk Flex


Black

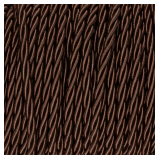
Brown


Cream


Silver

Available Sizes

Size One
TL711-SM,
Height: 29.4 cm (11.57")
Diameter: 15.5 cm (6.1")
Bulbs: 1 E26
Cable Exit: Top

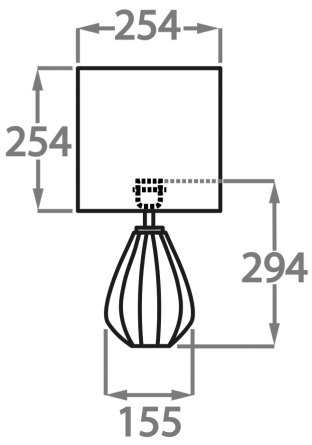

Size Two
TL711-LA,
Height: 43.6 cm (17.17")
Diameter: 23 cm (9.06")
Bulbs: 1 × 40W Cable Exit: Top

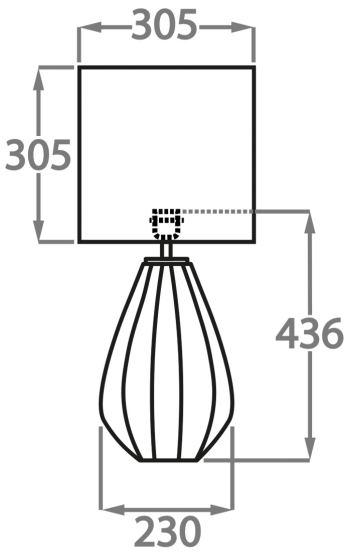

Dimensions are measured from the base of the lamp to the middle of the bulb holder and are excluding shade
TL711-SM: Overall height with an 8" tall drum shade 44cm - 17"
TL711-LA: Overall height with a 12" tall drum shade 75cm - 30"
Shades are also available in Customer Own Material (COM)

Please note, due to our Diamond table lamps being individually hand made and each one being unique, there may be slight variations in colour
All our Diamond lamps are top wired (French Wired)