BELLA FIGURA

Diamond Teardrop Slim Small Lamp

TL712-SM

Collection Name
BEVERLY HILLS COLLECTION

Introducing the new Diamond Teardrop range; unrivalled Italian glass work from our trusted makers in Murano; the design of these lamps carry the weight, craftsmanship and weight you expect from our faceted Diamond range but with sweeping curves and softer facets. Available in our core standout colour ways from the Beverley Hills collection and various silhouettes and sizes to suit

Test Certification

IEC (International Electrotechnical Commission) test certificates available - will incur a surcharge
UL (Underwriters Laboratories) test certificates available for the USA - will incur a surcharge
Suitable for Yachts - Rod and bolting available for use on yachts

Compatible with

Express

Yacht Club



TL712-SM in Tobacco & Clear Murano Glass with a 10" Tall Drum Shade in 5018W-03

Available Finishes

Metal Finish


Brushed Gold


Brushed Nickel


Polished Gold


Polished Nickel

Murano Glass Finish


Slate & Clear


Tobacco & Clear


Clear (Diamond)


Forest Green & Clear


Amethyst & Clear

Recommended Shade(s) (OPTIONAL)

10" Tall Drum

Silk Flex


Black

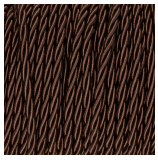
Brown


Cream


Silver

Available Sizes

Small
TL712-SM,
Height: 38.3 cm (15.08")
Diameter: 12 cm (4.72")
Bulbs: 1 × 40W E26
Cable Exit: Top

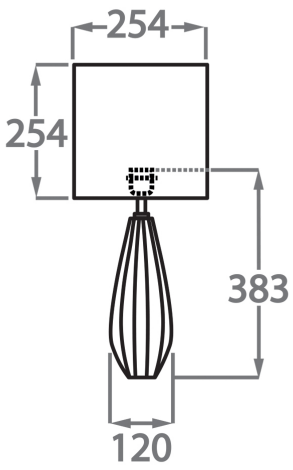

Large
TL712-LA,
Height: 48.6 cm (19.13")
Diameter: 16 cm (6.3")
Bulbs: 1 × 40W E26
Cable Exit: Top

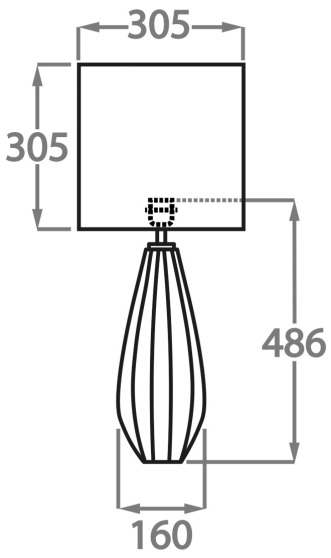

Dimensions are measured from the base of the lamp to the middle of the bulb holder and are excluding shade
TL712-SM: Overall height with a 10" tall drum shade 59cm - 23"
TL712-LA: Overall height with a 12" tall drum shade 76cm - 30"
Shades are also available in Customer Own Material (COM)

Please note, due to our Diamond table lamps being individually hand made and each one being unique, there may be slight variations in colour
All our Diamond lamps are top wired (French Wired)