BELLA FIGURA

Diamond Solitaire Small Lamp

TL713-SM

Collection Name
BEVERLY HILLS COLLECTION

A stunning new table lamp, which is from the same Italian artisan makers of our weighty Diamond lamps. Flawless, pristine polished Murano glass, which are mould made so that they are perfect every time, they are formed from four layers of glass in our core Beverly Hills collection colours. Available in two sizes, these lamp bases are slim, which makes them perfect for console and bedside tables.

Test Certification

IEC (International Electrotechnical Commission) test certificates available - will incur a surcharge
UL (Underwriters Laboratories) test certificates available for the USA - will incur a surcharge
Suitable for Yachts - Rod and bolting available for use on yachts

Compatible with

Yacht Club



TL713-SM in Tobacco & Clear and Polished Gold with 12" Oval in Bennett's 5018W-126 Acacia Bark

Available Finishes

Metal Finish


Polished Gold


Polished Nickel

Murano Glass Finish


Amethyst & Clear (Solitaire)


Clear (Solitaire)

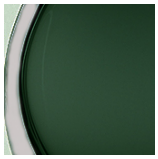
Forest Green & Clear (Solitaire)


Slate & Clear (Solitaire)


Tobacco & Clear (Solitaire)


Leopard & Clear (Solitaire)


Turquoise & Clear (Solitaire)

Recommended Shade(s) (OPTIONAL)

12" Oval

Silk Flex


Black


Cream


Silver


Brown

Available Sizes

Size One
TL713-SM,
Height: 34 cm (13.39")
Width: 22 cm (8.66")
Depth: 10 cm (3.94")
Bulbs: 1 × 40w E27
Net Weight: 8 kg / 18 lb Cable Exit: Top

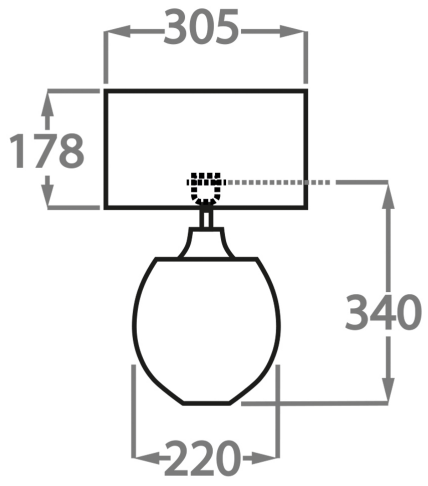

Size Two
TL713-LA,
Height: 40 cm (15.75")
Width: 28 cm (11.02")
Depth: 10 cm (3.94")
Bulbs: 1 × 40W E27
Net Weight: 10 kg / 22 lb Cable Exit: Top

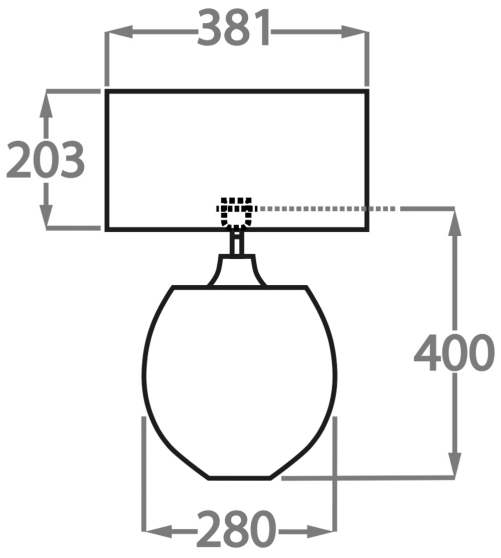

Dimensions are measured from the base of the lamp to the middle of the bulb holder and are excluding shade.

Shades are also available in Customer Own Material (COM)

Please note, due to our Diamond table lamps being individually hand made and each one being unique, there may be slight variations in colour